SWITCHlan
CISCO configuration

<ch-zone-contact@verw.switch.ch>
November 8, 1990 © SWITCH tl/TB
IP Addresses SWITCH = 130.59.
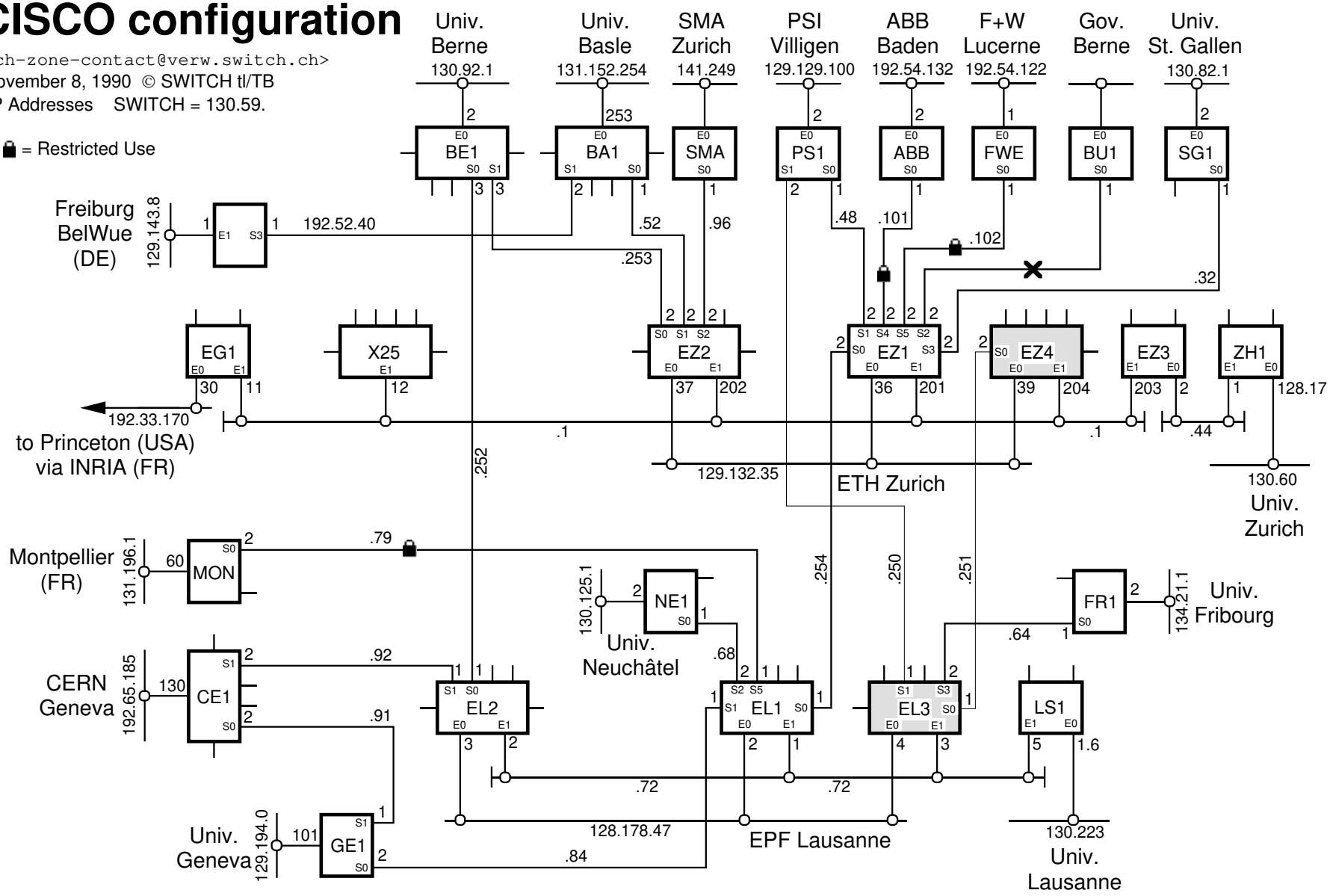
🔒 = Restricted Use